PART/ DWG NO.	REV	SH
6323266	D	1

REVISION

REV	DESCRIPTION	CN	APPROVAL
A	RELEASED	REFER TO CPDM	P. GRIPPO CPDM APPVL
B	ADDED FOR REFERENCE ONLY INFORMATION	REFER TO CPDM	P. GRIPPO CPDM APPVL
C	ADDED FY11, ZONE B-6; CV6, ZONE D-7, DELETED REFERENCE ONLY INFORMATION.	REFER TO CPDM	G. TALBOT CPDM APPVL
D	REMOVED CV5, FY8 & ASSOCIATED INPUT TUBING TO RBC BATH	REFER TO CPDM	G. TALBOT CPDM APPVL

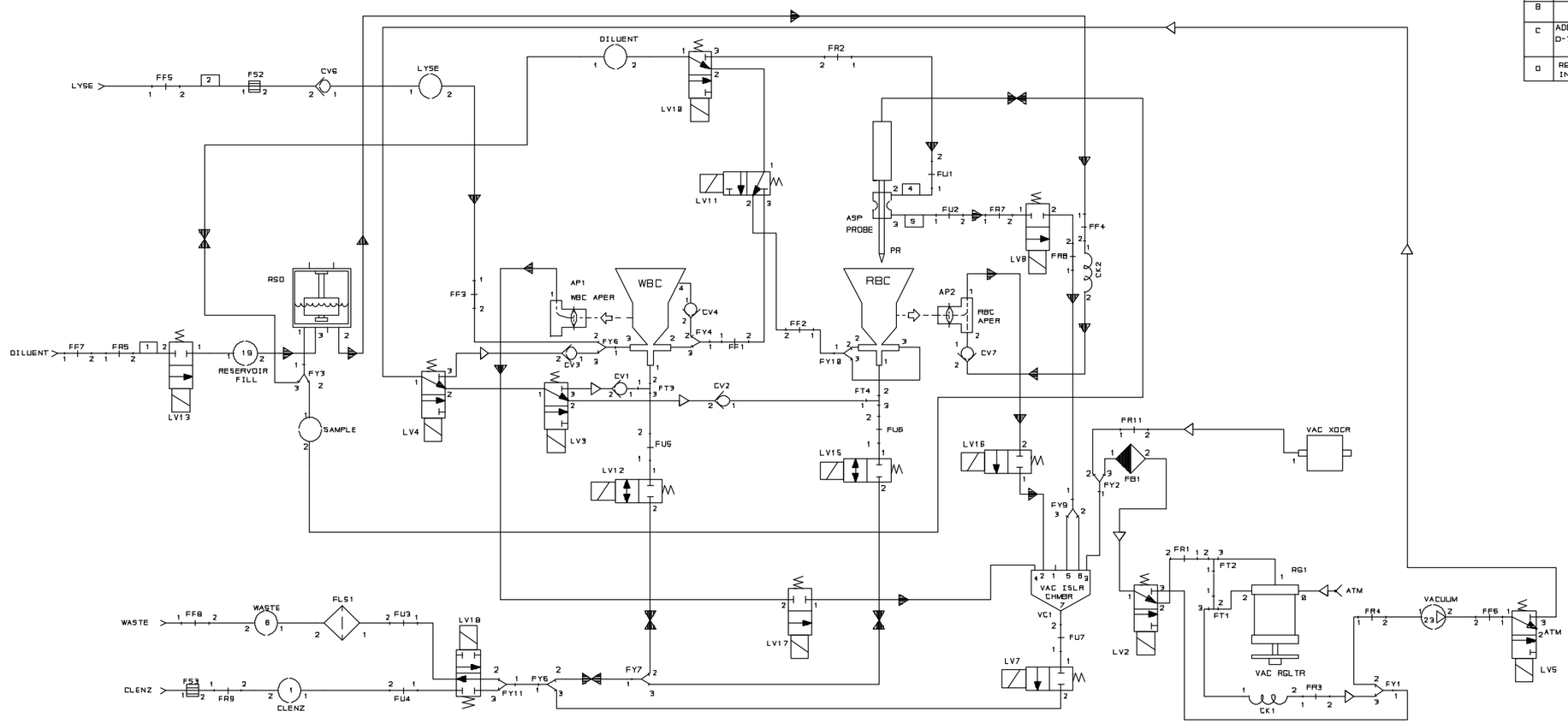

NOTES

1. SYMBOLS:

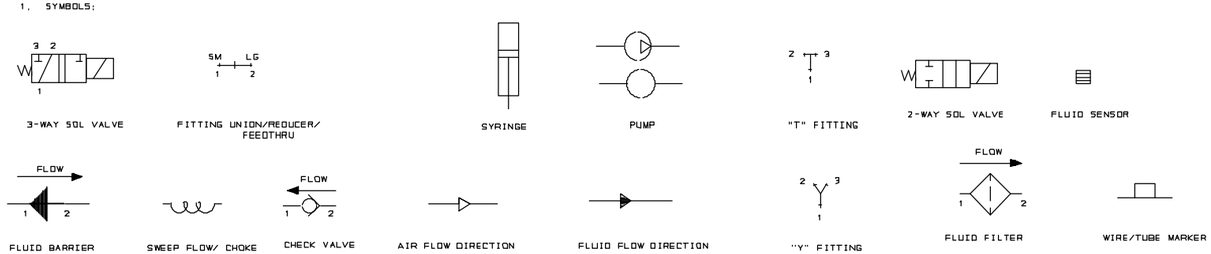

2. REFERENCE DESIGNATIONS (LAST USED):

FF = 8	CK = 2
FY = 11	FU = 7
FT = 4	RG = 1
CV = 7	VC = 1
LV = 18	FB = 1
FS = 3	

2. REFERENCE DESIGNATIONS (NOT USED):

FR = 6,10

FS = 1

LV = 1,6,9,14

FY = 8

CV = 5

THIS DRAWING AND/OR SPECIFICATION IS THE PROPERTY OF COULTER ELECTRONICS, INC., IS ISSUED IN STRICT CONFIDENCE, AND SHALL NOT BE REPRODUCED, COPIED, OR USED AS THE BASIS FOR THE MANUFACTURE OR SALE OF APPARATUS, WITHOUT PRIOR WRITTEN PERMISSION.

		ORIGINATOR
		K. PAREKH
	0375	
NEXT ASSY	MODEL	
USED ON		

COULTER CORPORATION.
MIAMI, FLORIDA
U.S.A.

SCHEM DIAG; HYDRO--PNEU, Ac.T SERIES

SIZE	PART/DRAWING NO.	REV
D	6323266	D

SCALE : NONE | SHEET 1 OF 1

CLASS CODE